CANDY BUILT/IN FREEZER Model: CFU135E

- Energy efficiency class : **A+**
- Height of the product: **820**
- Width (mm) (overall): **595**
- Depth (mm) (overall): **543**

Technical Specifications

- Total unit gross capacity (l): **103**
- Total unit net capacity (l): **97**
- Defrost process: **Manual**
- Temperature adjustable: **√**
- Number of drawers: **3**
- Light: **Assente**
- Energy consumption (kWh/day): **0,528**
- Total annual energy consumption (kWh): **193**
- Noise level (dB(A) re 1 pW): **43**
- Climate class: **N-st 16°-38°**

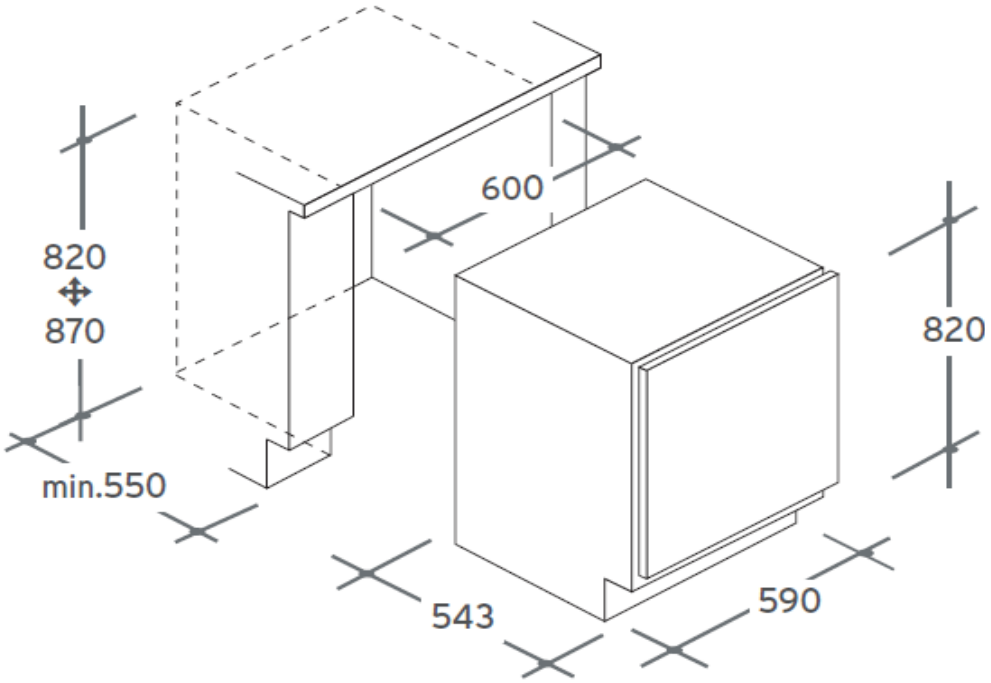

Για περισσότερες πληροφορίες, παρακαλώ επικοινωνήστε με το τηλ. 22666333 ή e-mail contact@domestica.com.cy